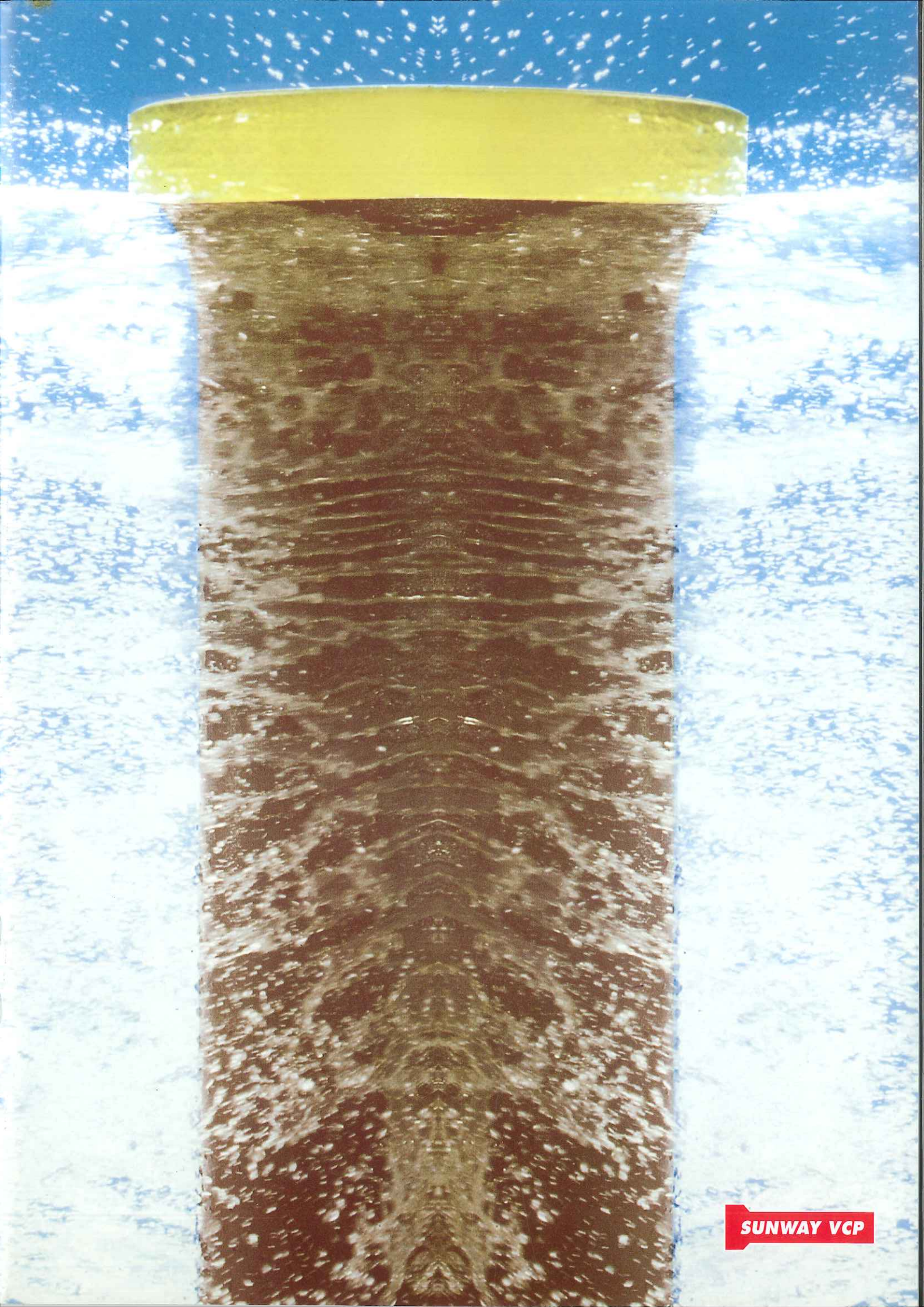
SUNWAY VCP

Fully glazed vitrified clay pipes (vcp)

contents

page

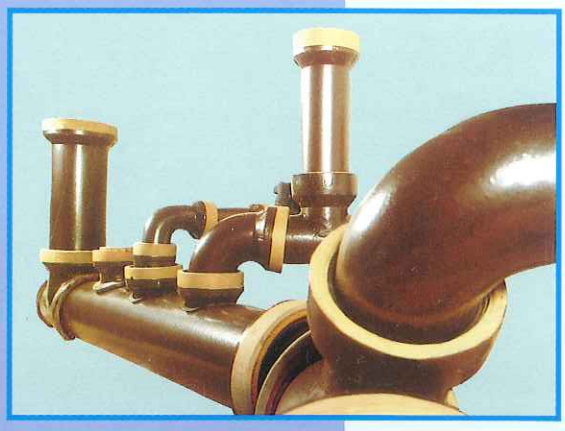

Why Clay?

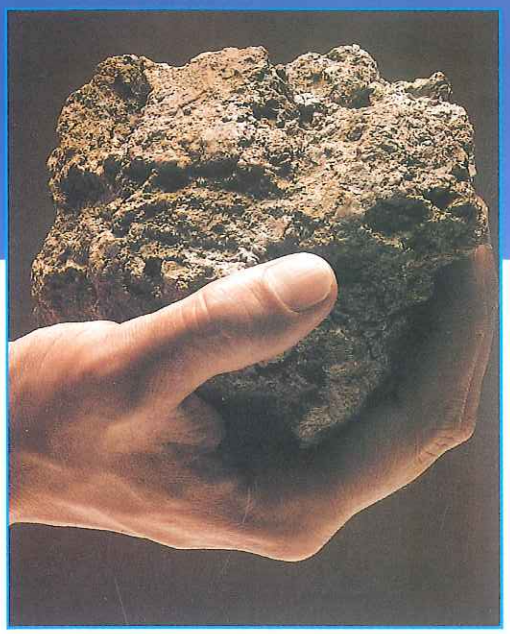

It's cheap, abundant, and readily available in most parts of the world. It is easily formed, assembled, and maintained. It has a proven record of corrosion resistance, longevity in service and reliability.

Clay is the "original" material used in water and public health engineering works. The Egyptians used fired clay containers to convey and store water 5000 years ago. Later, the Romans formed fired clay pipes to convey clean and dirty water.

Clay pipe is non-combustible. The pipe is vitrified at temperatures above 1000°C effectively eliminating any combustible material.

Clay is also extremely "green." It is by far the most environmentally-friendly material that can be used for transporting waste. Many of those re-discovered ancient pipes are found to be still be in good working condition, their corrosion resistance intact. Other sewer systems, some built as recently as the 20th century, and made of other materials, such as asbestos-cement, concrete, iron and plastics, have already deteriorated rapidly, allowing toxic material to seep into the ground.

And finally, clay pipes are easily recyclable. Unlike plastic and other pipes, they can be easily re-used and refabricated to produce new pipe material. That saves money... and helps save the environment too.

Why Sunway VCP ?

Sunway VCP offers world class technical and economical solutions for drainage and sewerage works. We provide a complete product range of pipes and fittings made of vitrified clay in standard dimensions and diameters ranging from of 150 to 1400 mm.

- Advanced European technology
- Superior in quality
- High structural strength
- Fully glazed inside and out
- Heat and chemical resistant
- Proven durability
- Socket/spigot type with prefabricated flexible joints
- Approved to MS 1061:1999 and BS EN 295
- Safe and easy palletised packing

Quality assurance, tested tough

Sunway VCP pipes are manufactured to meet stringent quality control criteria. Our manufacturing process includes numerous quality control checks and testing of samples from all pipes and fittings daily. These include tests, but not limited to the following :

- accurate dimensional tolerance
- bending moment resistance
- crushing strength
- water tightness
- chemical resistance
- deflection
- shear resistance

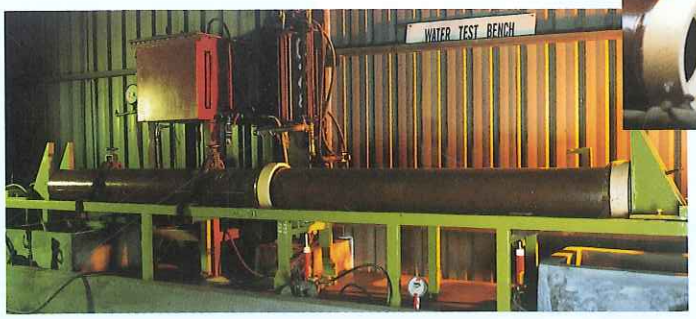

SUNWAY VCP

The superiority of vitrified clay pipes (vcp)

vcp compared with other pipe materials

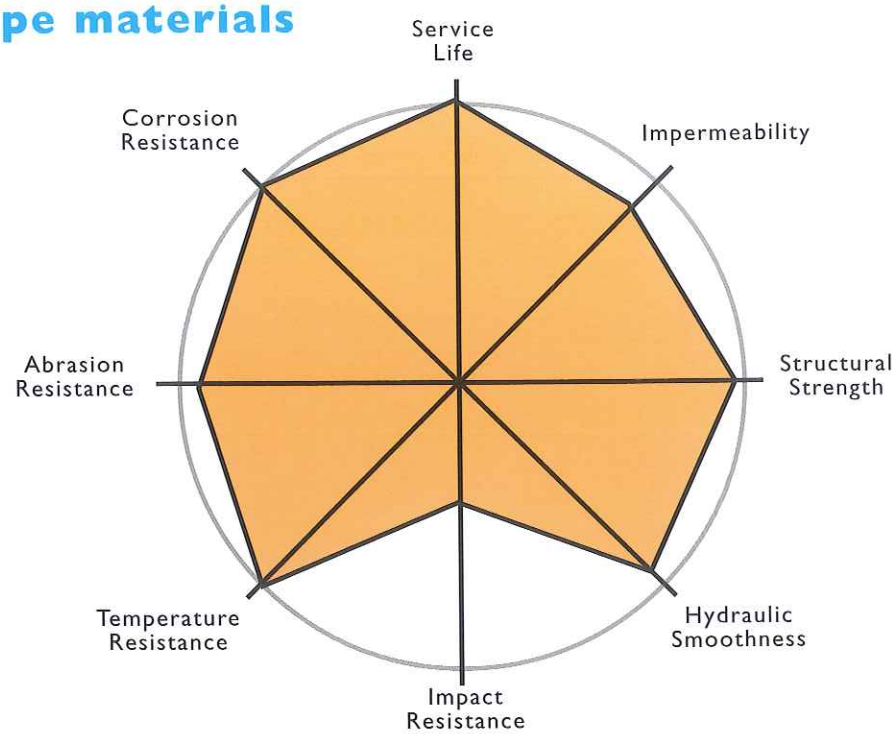

Vitrified Clay

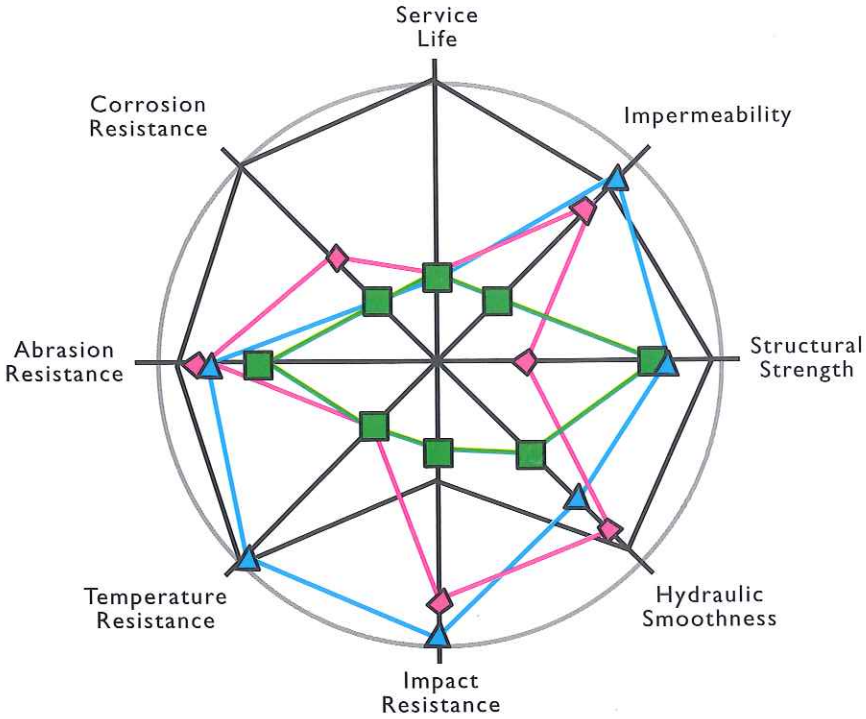

PVC

Concrete

Duct. Iron

In systems relying on gravity operation such as foul sewers, stormwater sewers and irrigation drainage, the pipeline materials used are principally clay, concrete and plastics (PVC, GRP, polyethylene, etc.).
Studies made by independent European industry analysts G. Petzow and H. Schubert attest to the superior qualities of vitrified clay. Their findings are diagrammed, utilising eight criteria which are placed as loci on a circular "performance chart." These indicate the relative advantages and disadvantages of each material in the areas of service life, impermeability,impact resistance, etc.

Summary of the properties of sewer pipes

Properties	Vitrified Clay	Concrete	PVC	GRP	Steel / DI	HDPE
Longevity (yrs)	100+	As conditions dictate	25+	25+	As conditions dictate	Not Known
Resistance to corrosion	Very good	Poor (Protection often required)	Good	Good	Poor (Protection often required)	Good
Resistance to abrasion	Very good	Fair	Good	Good	Good	Good
Length (mm)	1500 to 2500	3000	6000	6000	6000	6000
Flexible jointing system	Yes	Yes	Yes	Yes	Yes	Yes
Strengths	Depending on size and strength classifications					
Sizes (mm)	150 to 1400	300 to 3600	50 to 600	80 to 2500	80 to 2400	
Design	Simple	Simple	Complex	Complex	Complex	Complex
Workmanship required in placement	Minimum	Minimum	Very careful	Very careful	Minimum	Very careful
Supervision required during placement	Minimum	Minimum	Substantial	Substantial	Minimum	Substantial
Maintenance	Minimum	Periodic check when effluents are corrossive	Periodic check for elliptical deformation	Periodic check for elliptical deformation	Usually minimum but frequent if cathodic protection provided	Periodic check for elliptical deformation

SUNWAY VCP

The unique jointing system of Sunway VCP

Sunway VCP vitrified clay pipes is designed with L Jointing System. This System is manufactured in accordance with the quality standards established for flexible jointed pipes.

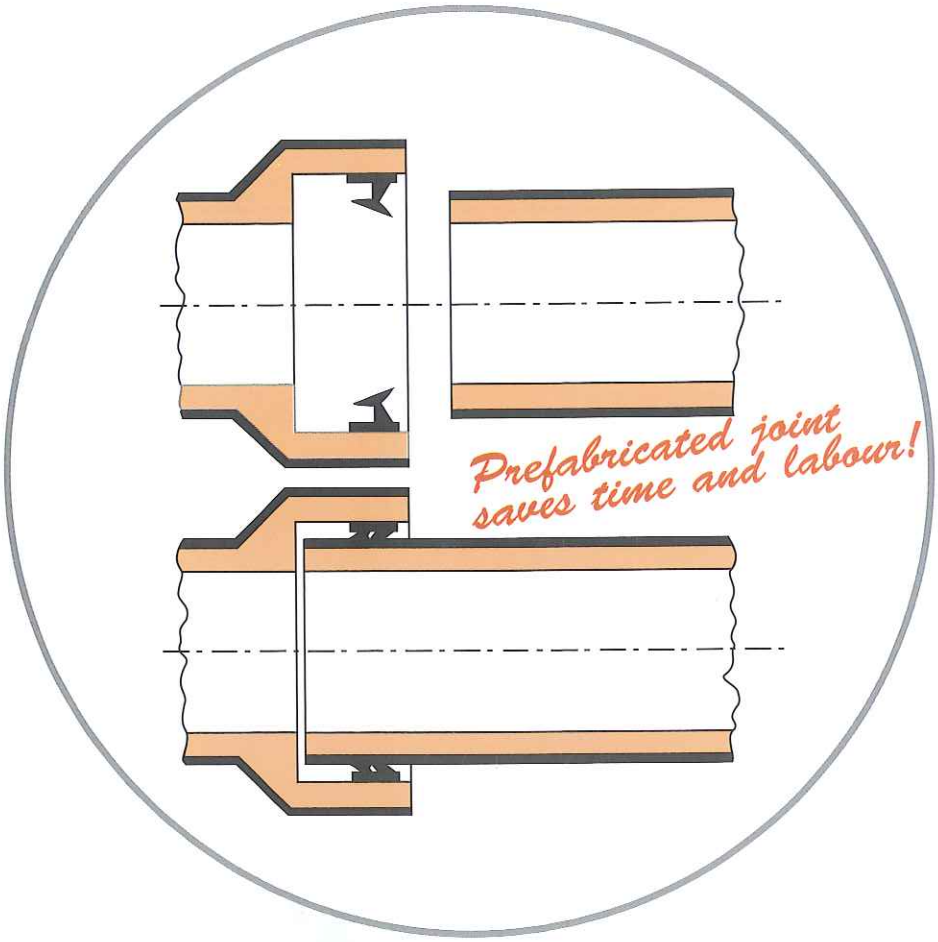

THE 'L' JOINT

Consists of a rubber lip ring fixed in the pipe socket with an epoxy sealant. No joint on the spigot end is required. Diameters: DN 150 - 600 mm.

Note:

- *Within the BS EN 295 (European Standard) L refers to jointing systems F.*
- *Lubricant - In order to facilitate installation of the pipes, a special lubricant is provided.*

SUNWAY VCP
VITRIFIED CLAY PIPES & FITTINGS

Sunway VCP vitrified clay pipes are glazed internally and externally. The pipes and fittings come complete with prefabricated lip rings (L joint 600 mm) for user friendly effective installations.

COMPARISON OF CRUSHING STRENGTH VALUES OF MS 1061:1999 AND BS EN 295

According to technical specifications and prescribed norms, a specific pipe type can be selected on the basis of following tabulation of minimum allowed crushing strengths (denominated in kilo Newton per metre, kN/m).

Pipes			MS 1061:1999			BS EN 295			
			Crushing Strength (kN/m)			Crushing Strength (kN/m)			
Diameter	Joint	Length		Class			Class		
DN (mm)		(mm)		120	160		120	160	200
150	L	1500	FN 34			FN 28/34			
200	L	1750/2000		24	32		24	32	40
225	L	1750/2000		28	36		28	36	45
250	L	2000		30	40		30	40	
300	L	2000		36	48		36	48	60
375	L	2000		45			45		
450	L	2000		54	72		54	72	
600	L	2000		72	96		72	96	

Comparison between MS 1061 : 1999 and BS EN 295 : 1991

			MS 1061:1999		BS EN 295	
			Min.	Max.	Min.	Max.
1.	**DIMENSIONS AND TOLERANCES**					
a.	Bore	DN 150	146 mm	NA	146 mm	NA
		DN 200	195 mm	NA	195 mm	NA
		DN 225	219 mm	NA	219 mm	NA
		DN 250	244 mm	NA	244 mm	NA
		DN 300	293 mm	NA	293 mm	NA
		DN 375	366 mm	NA	366 mm	NA
		DN 450	439 mm	NA	439 mm	NA
		DN 600	585 mm	NA	585 mm	NA
b.	Length		-1%, +4%		-1%, +4%	
c.	Squareness of ends	DN 150, DN 200, DN 225, DN 250, DN 300	≤ 6 mm		≤ 6 mm	
		DN 375	≤ 7.5 mm		≤ 7.5 mm	
		DN 450	≤ 9 mm		≤ 9 mm	
		DN 600	≤ 12 mm		≤ 12 mm	
d.	Straightness	DN 150	max. 5.0	mm/m	max. 4.5	mm/m
		DN 200	max. 5.0	mm/m	max. 4.5	mm/m
		DN 225	max. 5.0	mm/m	max. 4.5	mm/m
		DN 250	max. 5.0	mm/m	max. 4.5	mm/m
		DN 300	max. 4.0	mm/m	max. 4.0	mm/m
		DN 375	max. 4.0	mm/m	max. 4.0	mm/m
		DN 450	max. 4.0	mm/m	max. 4.0	mm/m
		DN 600	max. 4.0	mm/m	max. 4.0	mm/m
e.	Angle of curvature of bends		±5° for 45°, 90°		±5° for 45°, 90°	
f.	Branch angle of junctions		±5°		±5°	
2.	**PERFORMANCE REQUIREMENTS**					
a.	Crushing strength	DN 150	* 34 kN/m for FN 34		* 34 kN/m for FN 34	
		DN 200	* 32 kN/m for Class 160		* 32 kN/m for Class 160	
		DN 225	* 36 kN/m for Class 160		* 36 kN/m for Class 160	
		DN 250	* 40 kN/m for Class 160		* 40 kN/m for Class 160	
		DN 300	* 48 kN/m for Class 160		* 48 kN/m for Class 160	
		DN 375	* 45 kN/m for Class 120		* 45 kN/m for Class 120	
		DN 450	* 72 kN/m for Class 160		* 72 kN/m for Class 160	
		DN 600	* 96 kN/m for Class 160		* 96 kN/m for Class 160	
b.	Impermeability	pipes	NA		NA	
		fittings	0.5 bar for 5 min		0.50 bar for 5 min	
c.	Bending moment resistance	DN 150	* 4.0 kN.m for FN 34		* 4.0 kN.m for FN 34	
		DN 200	* 6.2 kN.m for Class 160		* 6.2 kN.m for Class 160	
		DN 225	* 7.4 kN.m for Class 160		* 7.4 kN.m for Class 160	
d.	Water tightness		≤ 0.07 litres/m2 at 0.5 bar		≤ 0.07 litres/m2 at 0.5 bar	
e.	Chemical resistance	mass loss	≤ 0.25%		≤ 0.25%	
f.	Fatigue strength under pulsating load		2 x10^6 cycles		2 x10^6 cycles	
g.	Hydraulic roughness		0.02 mm - 0.05 mm		0.02 mm - 0.05 mm	
h.	Abrasion resistance		0.02 mm - 0.05 mm		0.02 mm - 0.05 mm	
3.	**JOINT ASSEMBLIES**					
a.	Internal pressure		0.05 bar & 0.5 bar		0.05 bar & 0.5 bar	
b.	External pressure		0.05 bar & 0.5 bar		0.05 bar & 0.5 bar	
c.	Angular deflection	DN 150	80 mm/m for 5 min		80 mm/m for 5 min	
		DN 200	80 mm/m for 5 min		80 mm/m for 5 min	
		DN 225	30 mm/m for 5 min		30 mm/m for 5 min	
		DN 250	30 mm/m for 5 min		30 mm/m for 5 min	
		DN 300	30 mm/m for 5 min		30 mm/m for 5 min	
		DN 375	30 mm/m for 5 min		30 mm/m for 5 min	
		DN 450	30 mm/m for 5 min		30 mm/m for 5 min	
		DN 600	20 mm/m for 5 min		20 mm/m for 5 min	
d.	Straight draw		NA		NA	
e.	Shear resistance		25 N/mm pipe dia		25 N/mm pipe dia	
			0.5 bar for 15 min		0.5 bar for 15 min	
f.	Invert conformity		5 mm for DN 150, 200, 225, 250 and 300.		5 mm for DN 150, 200, 225, 250 and 300.	
			6 mm for DN 375 & DN 450, 600		6 mm for DN 375 & DN 450, 600	
g.	Joint interchangeability	DN 150 (Spigot Controlled System)	(188 ± 2) mm		(188 ± 2) mm	
		DN 200 (Spigot Controlled System)	(242 ± 3) mm		(242 ± 3) mm	
		DN 225 (Spigot Controlled System)	(271 ± 3) mm		(271 ± 3) mm	
		DN 250 (Spigot Controlled System)	(298 ± 4) mm		(298 ± 4) mm	
		DN 300 (Spigot Controlled System)	(355 ± 4) mm		(355 ± 4) mm	
		DN 375 (Spigot Controlled System)	(449 ± 4) mm		(449 ± 4) mm	
		DN 450 (Spigot Controlled System)	(532 ± 5) mm		(532 ± 5) mm	
		DN 600 (Spigot Controlled System)	(731 ± 4) mm		(731 ± 4) mm	
h.	Chemical resistance		0.05 & 0.5 bar for 5 min (complete soaking)		0.05 & 0.5 bar for 5 min (complete soaking)	
i.	Thermal cycling stability		-10°C, + 70°C		-10°C, + 70°C	
j.	Long term thermal stability		7 days at 45°C, 5°C, 0°C		7 days at 45°C, 5°C, 0°C	

Notes: * *with pre-conditioning* NA *Not applicable*

Bedding preparation for Sunway VCP pipes

The latest methods of manufacture and control have enabled Sunway VCP to guarantee their pipes to be of high load bearing strengths. The total structural load that a pipeline can carry depends on the combination of the pipe bedding on which it is laid. Thus, high strength bedding can be used with low strength pipes or low strength bedding with high strength pipes.

Sunway VCP pipes require only low bedding strengths due to their inherent strong body. In normal soil conditions (G2, G1, G3), Sunway VCP pipes require only a flexible bedding of granular materials or laid directly on the trimmed bottom of the trench. With higher loadings, a concrete bedding can become necessary or higher strength pipes used. As a general guide, the following tables are recommended for Sunway VCP pipes. However, depending on prevailing site conditions, other combinations of static parameters apply.

Bedding recommendations

Single trench with groundwater, trench width according to EN 1610 with trench sheeting and different traffic loads.

Soil		Trench conditions	
backfill	: G2	backfill, embedment	: A2, B2
embedment	: G1	trench angle	: 90°
existing soil	: G3	Load	
groundwater	: no	traffic load	: SLW 60

Soil		Trench conditions	
backfill	: G2	backfill, embedment	: A2, B2
embedment	: G1	trench angle	: 90°
existing soil	: G3	Load	
groundwater	: no	traffic load	: SLW 30

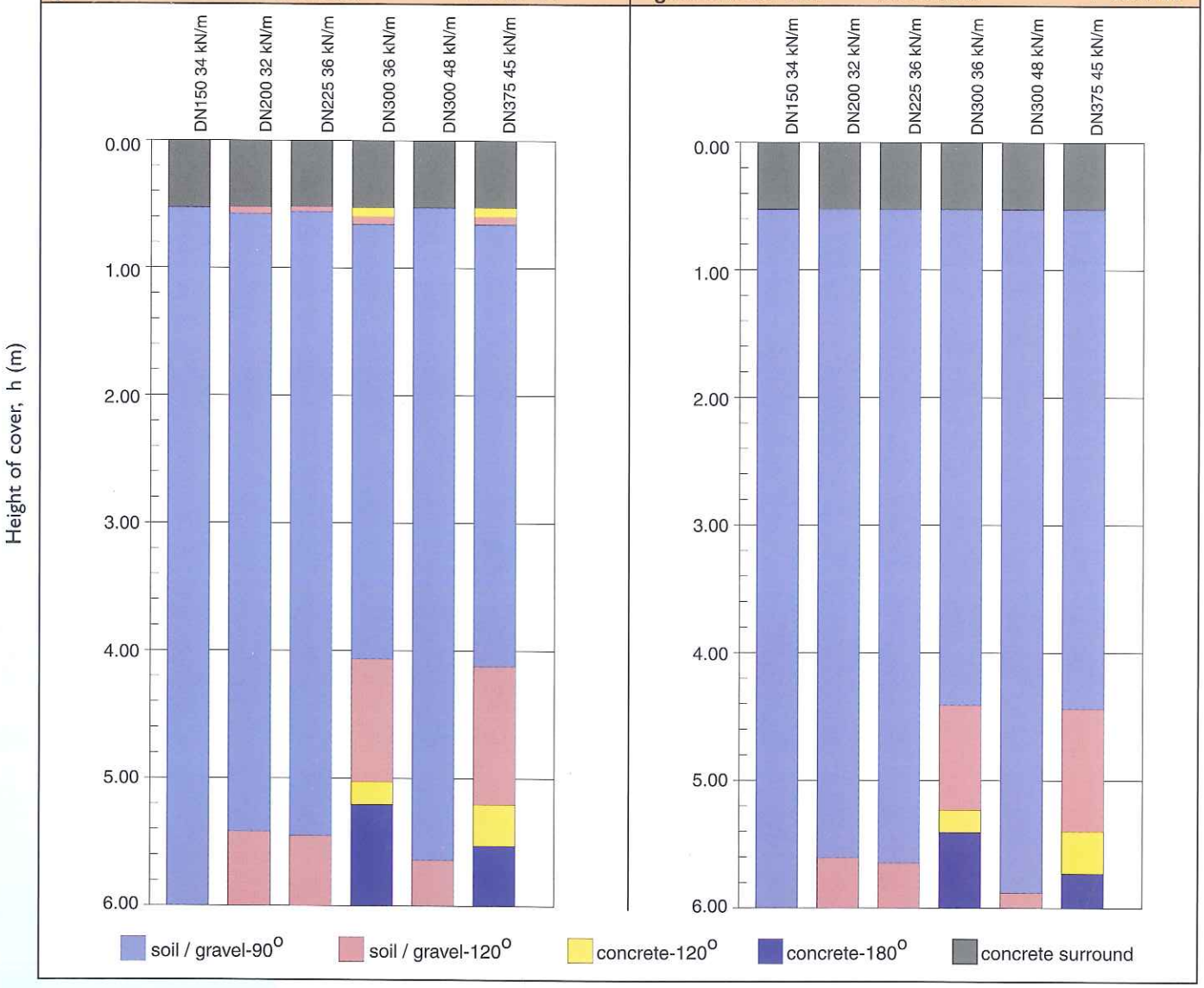

SUNWAY VCP

NOMENCLATURE to A 127 (ATV - Working Sheet)

Types of soil

G1 : Non-cohesive soils (sand, coarse gravel or sand and gravel mixtures)

G2 : Slightly cohesive soils (clayey sand or sand and gravel)

G3 : Cohesive mixed soils, silt

Conditions for backfilling of the trench above pipe zone

A1 : In layers compacted backfill against the undisturbed soil (without identification of the degree of compaction).

A2 : Vertical trench sheeting by means of steel piles or light interlocking steel piles, only to be removed after the backfilling of the trench. Frame-type trench shores or equipment, which are removed step-by-step in the process of the backfilling. Uncompacted trench backfilling.

A3 : Vertical trench sheeting with heavy interlocking steel piles, poling boards, frame-type trench shoring etc., removed only after backfilling.

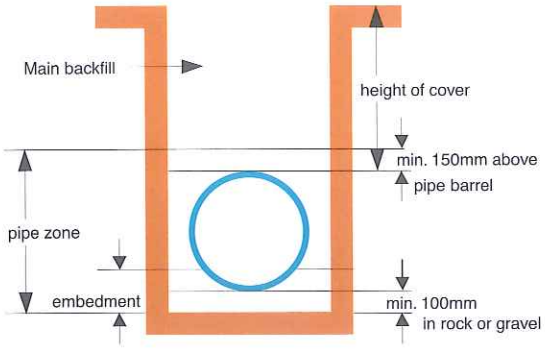

Conditions for embedding of pipelines

B1 : In layers compacted backfill against the undisturbed soil, or in embankment (without identification of the degree of compaction).

B2 : Vertical trench sheeting within the pipe zone by means of steel sheet piles or light interlocking piles, only to be removed after the backfilling of the trench. Frame-type trench shores or equipment, the assumption that the compaction of the soil is assured after the removal of the equipment.

B3 : Vertical trench sheeting within the pipe zone with heavy interlocking sheet piles, poling boards, frame-type trench shorting etc., without effective compaction after the removal of the equipment.

TYPES of pipe bedding

to EN 1610 and ATV - working sheet A 127

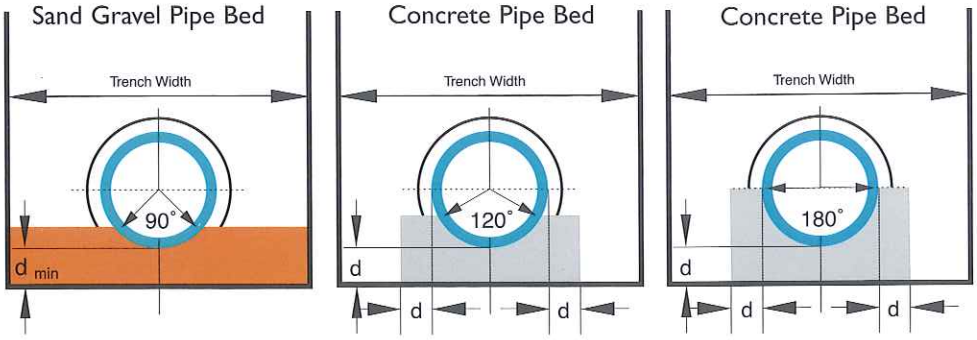

d_{min} = 100mm d = 50mm+1/10DN in mm, min. 100mm d = 1/4 DN in mm, min. 100mm

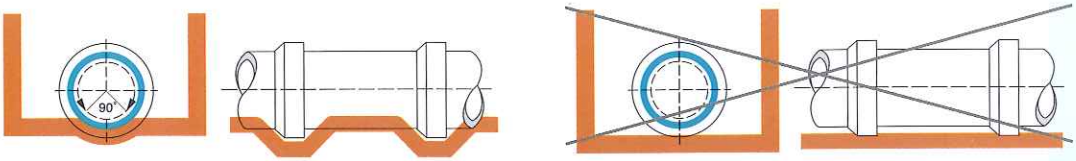

Socket holes must be made so that the sockets do not lie on a compacted bottom. This would result in point loading. Support must be provided over the whole barrel length.

Traffic Loads

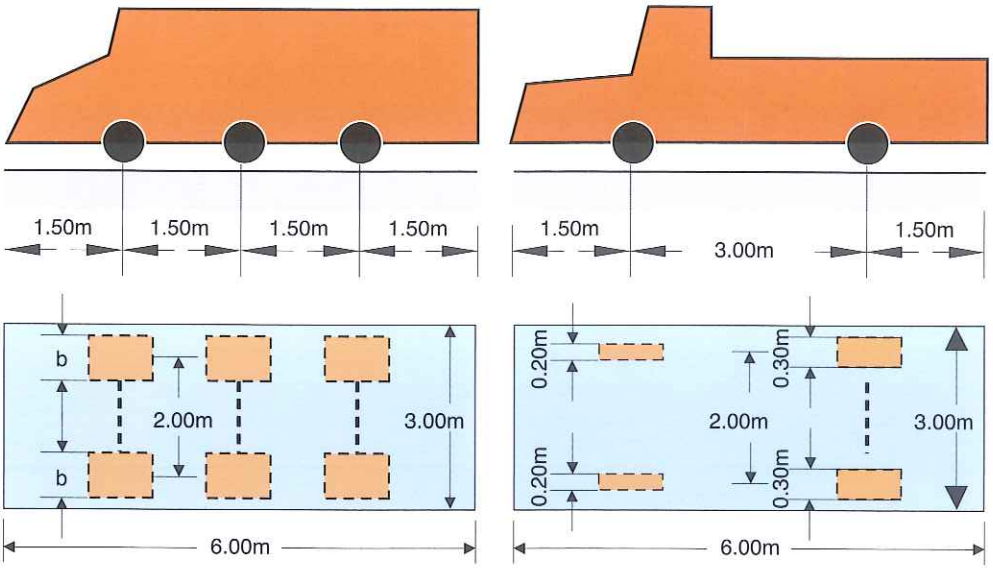

Traffic Loads

standard vehicle	total load (kN)	wheel load (kN)	wheel contact area		substitution load (kN/m²)
			width (m)	length (m)	
SLW 60	600	100	0.6	0.2	33.3
SLW 30	300	50	0.4	0.2	16.7
LKW 12	120	front 20	0.2	0.2	6.7
		rear 40	0.3	0.2	6.7

Minimum trench width according to EN1610

DN	Minimum trench width (m)		
	Supported trench	Unsupported trench	
		ß > 60	ß ≤ 60
≤ 225	b = d3 + 0.40	b = d3 + 0.40	b = d3 + 0.40
> 225 to ≤ 350	b = d3 + 0.50	b = d3 + 0.50	b = d3 + 0.40
> 350 to ≤ 700	b = d3 + 0.70	b = d3 + 0.70	b = d3 + 0.40
> 700 to ≤ 1200	b = d3 + 0.85	b = d3 + 0.85	b = d3 + 0.40
> 1200	b = d3 + 1.00	b = d3 + 1.00	b = d3 + 0.40
Note: d3 is the outer diameter of pipe barrel			

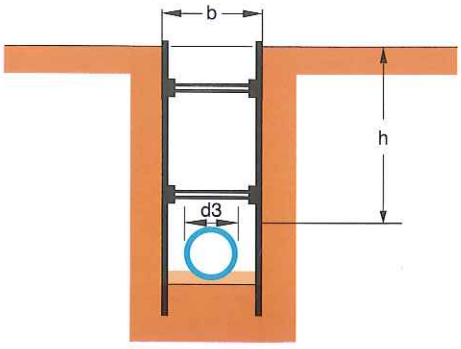

narrow / supported trench

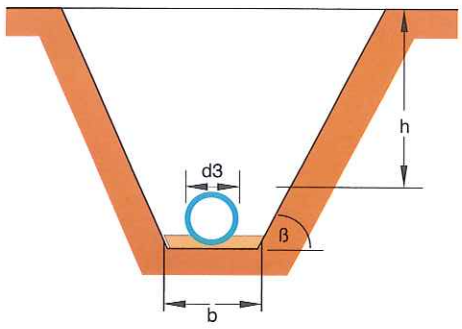

wide / unsupported trench

Straight Pipes

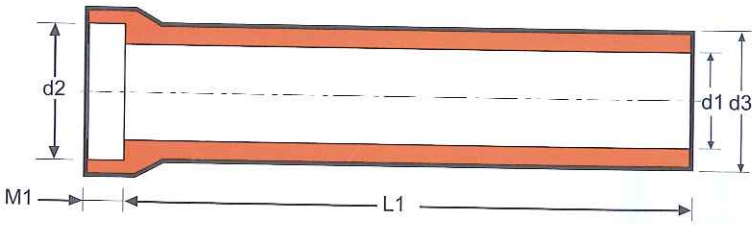

Dimensions	Diameter DN (mm)							
	150	200	225	250	300	375	450	600
L1 (mm)	1500	1750/2000	1750/2000	2000	2000	2000	2000	2000
M1 (mm)	75	75	70	75	70	70	75	85
d1 (mm)	150	200	225	244	300	375	450	595
d2 (mm)	205	262	291	318	376	483	567	773
d3 (mm)	188	242	271	298	355	449	532	731
Approx.Wt. (kg)	40	69/82	75/85	101	127	198	300	530

Bends

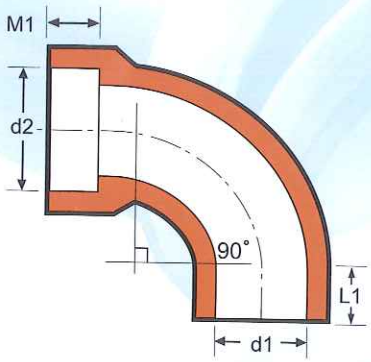

Dimensions	Diameter DN (mm)/Degree								
	150		200		225		300		375
	45°	90°	45°	90°	45°	90°	45°	90°	90°
d1 (mm)	150	150	200	200	225	225	300	300	375
d2 (mm)	205	205	262	262	291	291	376	376	483
L1 (mm)	75	75	85	85	85	85	85	85	81
M1 (mm)	70	70	70	70	70	70	70	70	70
Approx.Wt. (kg)	10	12	13	23	24	32	48	53	81

Wye (*Oblique*)

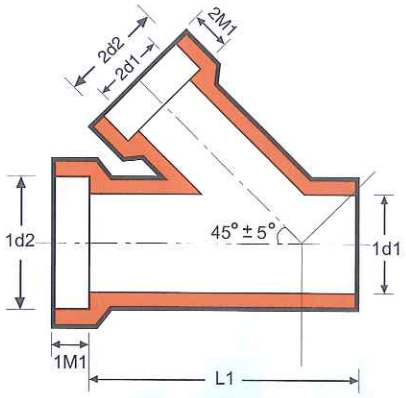

Dimensions	Diameter DN1 / DN2 (mm)						
	150/150	200/150	225/150	225/225	300/150	300/225	300/300
L1 (mm)	450	480	480	600	480	600	750
1d1 (mm)	150	200	225	225	300	300	300
1d2 (mm)	205	262	291	291	376	376	376
1M1 (mm)	70	70	70	70	70	70	70
2M1 (mm)	70	70	70	70	70	70	70
2d1 (mm)	150	150	150	225	150	225	300
2d2 (mm)	205	205	205	291	205	291	376
Approx.Wt. (kg)	18	29	33	36	47	60	72

Tee (*Square*)

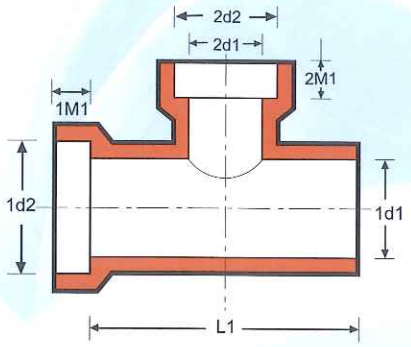

Dimensions	Diameter DN1 / DN2 (mm)								
	150/150	200/150	225/150	225/225	300/150	300/225	300/300	375/375	450/450
L1 (mm)	400	480	480	480	480	480	600	750	750
1d1 (mm)	150	200	225	225	300	300	300	375	450
1d2 (mm)	205	262	291	291	376	376	376	483	558
1M1 (mm)	70	70	70	70	70	70	70	80	80
2M1 (mm)	70	70	70	70	70	70	70	80	80
2d1 (mm)	150	150	150	225	150	225	300	375	450
2d2 (mm)	205	205	205	291	205	291	376	483	558
Approx.Wt. (kg)	16	24	32	36	45	50	52	110	207

Tumbling Bay *(Oblique)*

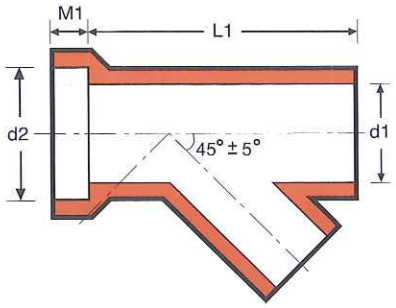

Dimensions	DN (mm)			
	150	200	225	300
d1 (mm)	150	200	225	300
d2 (mm)	205	262	291	376
L1 (mm)	460	600	600	750
M1 (mm)	70	70	70	70
Approx.Wt. (kg)	20	35	40	66

Tumbling Bay *(Curved Square)*

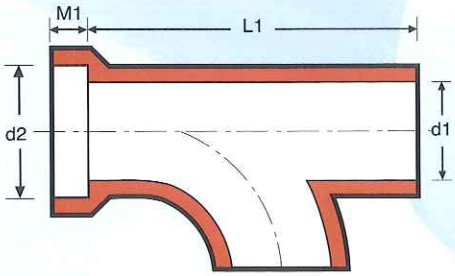

Dimensions	DN (mm)			
	150	200	225	300
d1 (mm)	150	200	225	300
d2 (mm)	205	262	291	376
L1 (mm)	450	520	520	640
M1 (mm)	70	70	70	70
Approx.Wt. (kg)	15	24	34	63

Clay Stoppers

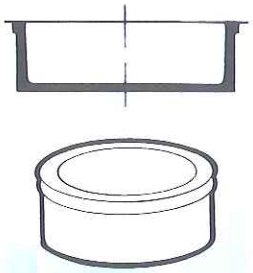

Diameter DN(mm)	For Joint	Weight (kg/pc)
150	L	2
200	L	4
225	L	6
300	L	10

Saddles

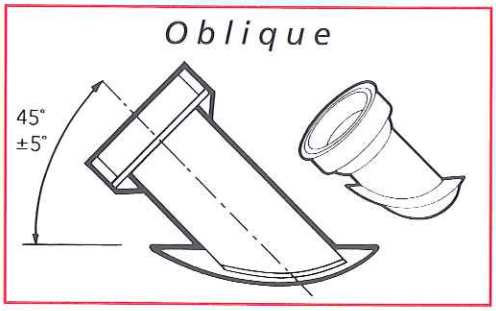

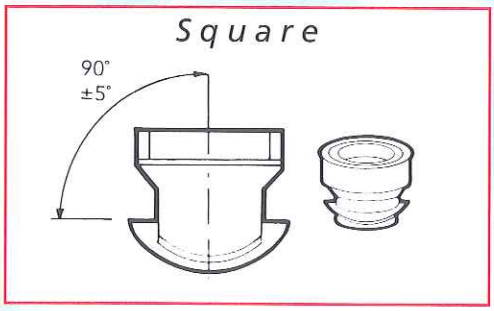

Branch Diameter DN(mm)	Main line diameter			
	DN 225	DN 300-350	DN 400-600	DN 700-1200
150	x	x	x	x
200		x	x	x
225		x	x	x

When ordering, please mention DN of main line.

Note:
Peculiar to the ceramic manufacturing process, all weights and dimensions are as close as accurately possible.

Accesories for use with vitrified clay pipes

Stainless Steel Coupling

The couplings is carefully selected and primarily designed for jointing pipes without sockets.

This coupling requires the ability to provide a reliable seal and resistance against heavy earth loads and flexible joint.

It is especially useful for repair new or existing pipelines.

Ranges available: 150mm – 450mm diameters.

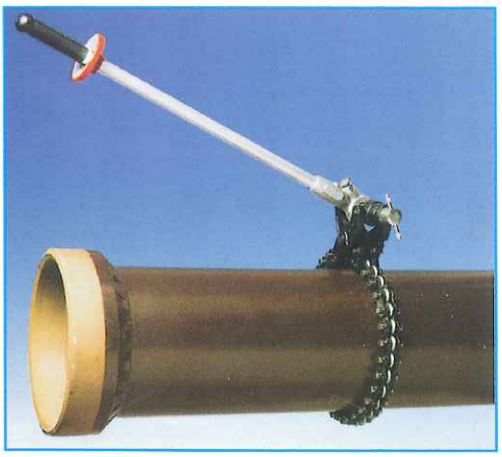

Pipecutter

Clay pipes can be cut to desired lengths by using a cutting chain for diameters up to DN 300mm.

For diameters greater than DN 300mm can use portable disc cutter.

Laying of Sunway VCP vitrified clay pipes

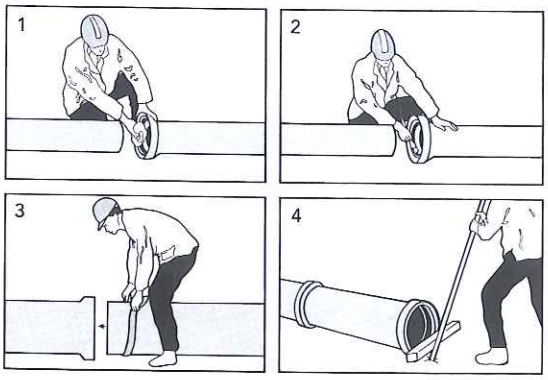

Pipes with L Joint

Instructions:

- Clean socket and spigot joints.
- Apply lubricant on inside of joint.
- Align spigot into socket.
- Push spigot into socket with crowbar.

Construction of Backdrop Manholes

- With backdrop junctions.

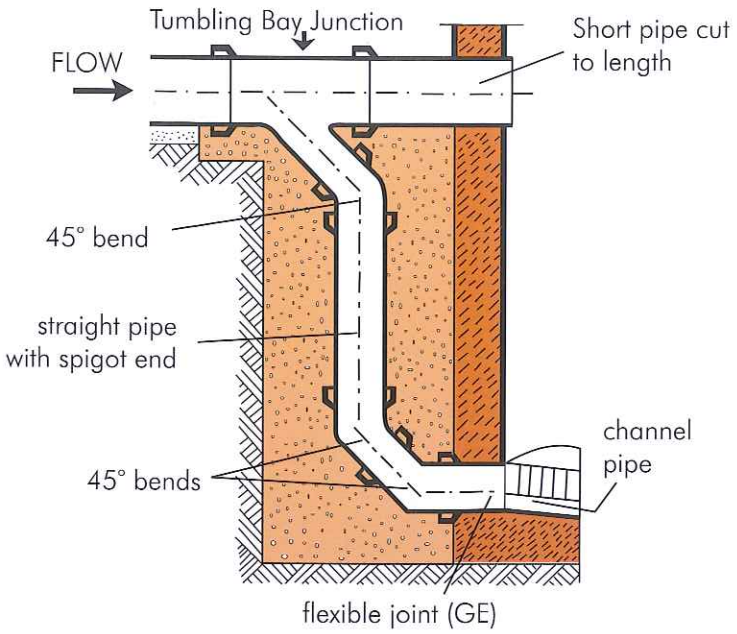

SUNWAY VCP

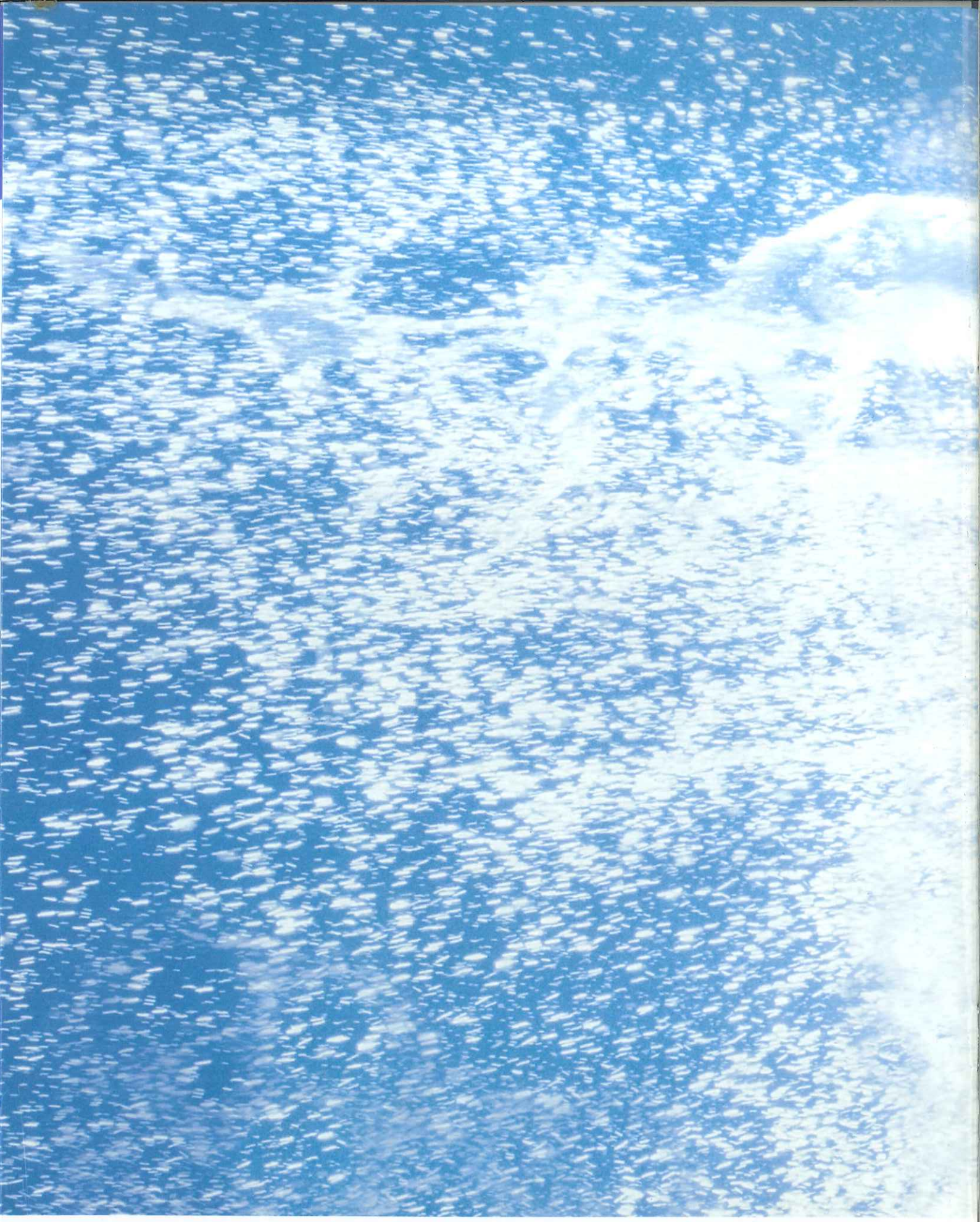

SUNWAY VCP SDN BHD (Co. No. 205881-A)

Factory & Main Office: Lot 6489 & 6490, Off 6th Mile,
Jalan Kapar, 42100 Klang, Selangor D.E., Malaysia.

Tel: 603-3291 5288 Fax: 603-3291 5388
Website: www.sunway.com.my/sunwayvcp

CERTIFIED TO ISO 9001:2015
CERT. NO.: AR0506

CERTIFIED TO ISO 14001:2015
CERT. NO.: EMS00796

SUNWAY VCP